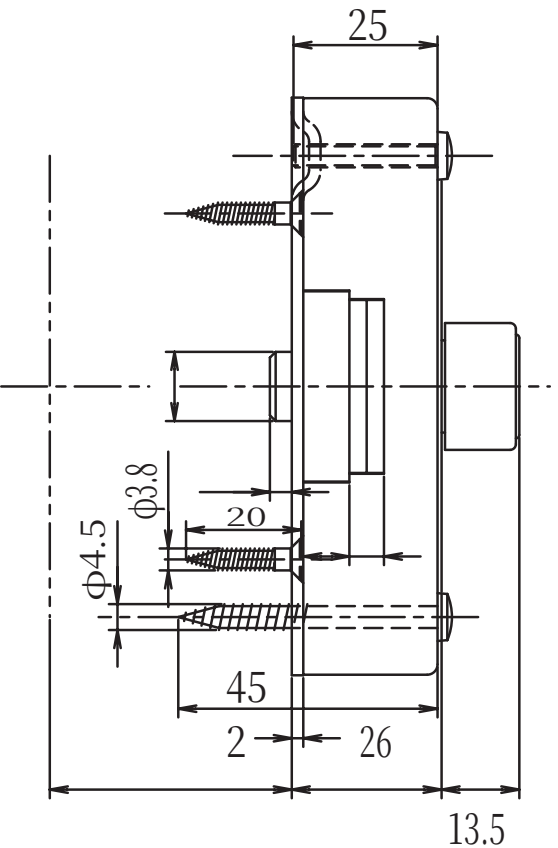
25
φ3.8
20
φ4.5
45
2
26
13.5

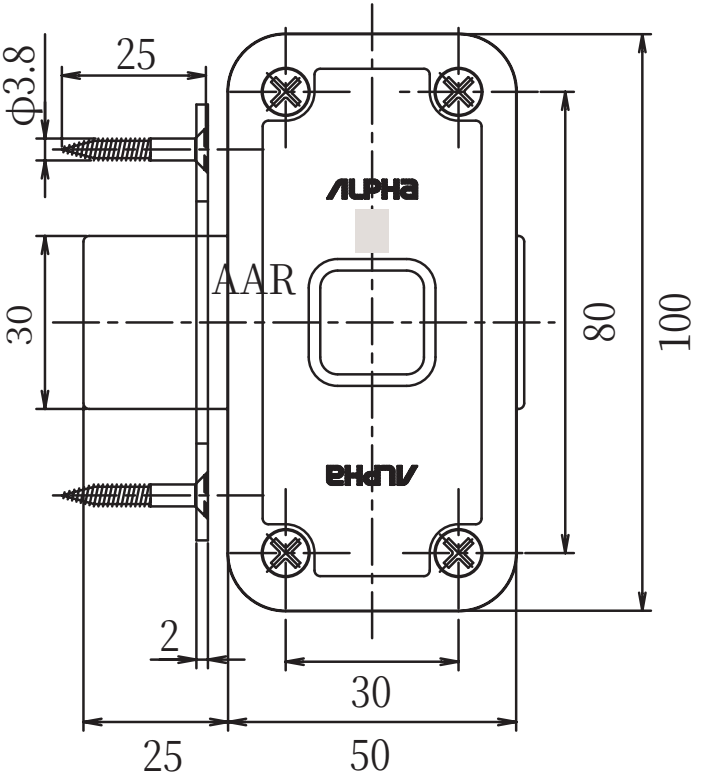
φ3.8
25
ALPHA
AAR
30
80
100
ALPHA
2
30
25
50